CAPSTAN WINCH
Model: LCAP250

The Capstan Winch is suited to tackle the toughest wall, ground and underground pulling applications, due to its dual capacity of 2500kg and 1500kg.
This product is precision engineered and constructed from heavy duty material which creates a high performance product with low maintenance.



Features

- 240 volt single phase cable puller.
- Dual pulling capacity of 2500 kg and 1500 kg.
- Dual speeds vary according to drum size.
- Over load protection switch which ensure automatic shut-off.
- Electromagnetic spring-applied fail safe brake.
- Heavy duty high efficiency ball bearings on all running surfaces.
- Rugged high power induction motor for proven reliability.
- Case hardened gear train for maximum mechanical efficiency.
- Rope storage reeler.
- Supplied with 3m power supply cable.
- Suitable rope diameter 7mm to 12mm. Please note that rope is not supplied as standard.

Application





Foot Control for ease of operation

Dimensions

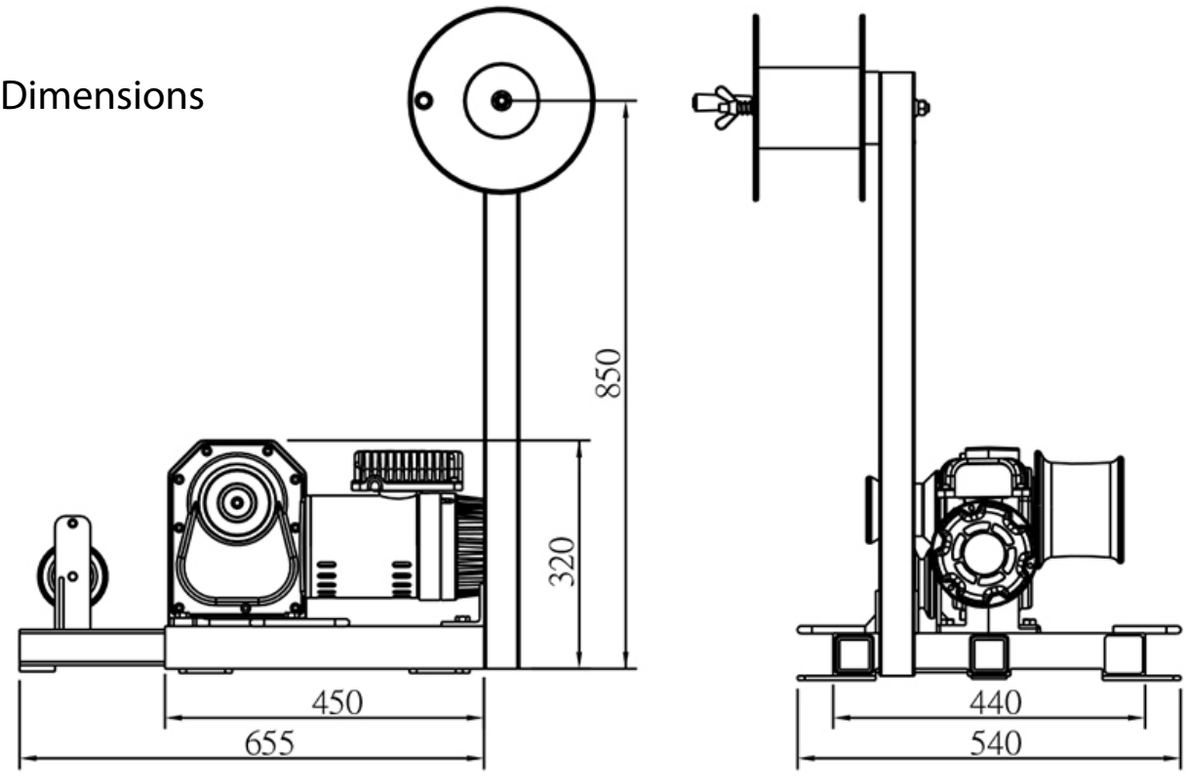

Specifications

Code	LCAP250
Pulling capacity kg	1500 / 2500
Max pulling duration min	15
Speed m/min	4.0 / 2.5
Control	Foot Control
Gear Ratio	154:1
Net Weight kg	60

⚠ A minimum of six (6) wraps of rope around the drum is necessary to support the rated load.

Do not use the Capstan Winch as a lifting device or for vertical lifting